HEBEI HAIHAO GROUP
Mengcun,Cangzhou,Hebei,China
www.haihaopiping.com

ISO,ABS,CE/PED APPROVED
Professional Steel Piping Solution
Email: sales@haihaogroup.com

DIN 86030

Hubbed slip-on flanges for welding: nominal pressure 16

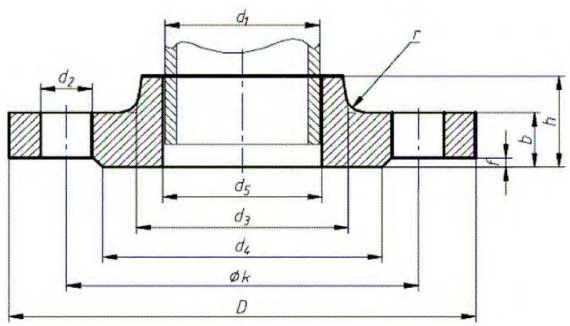

measurements in mm

Nominal size DN	pipe OD d_1	flange D	d_5	b	k	h	neck d_3	r	gasket width d_4	face height f	screws number	thread	d_2	weight (7.85 kg/dm³) kg
10	17.2	90	17.7	14	60	20	30	4	40	2	4	M 12	14	0.56
15	21.3	95	22	14	65	20	35	4	45	2	4	M 12	14	0.62
20	26.9	105	27.6	16	75	24	45	4	58	2	4	M 12	14	0.91
25	33.7	115	34.4	16	85	24	52	5	68	2	4	M 12	14	1.09
32	42.4	140	43.1	16	100	26	60	5	78	2	4	M 16	18	1.58
40	48.3	150	49	16	110	26	70	5	88	3	4	M 16	18	1.76
50	60.3	165	61.1	18	125	28	85	5	102	3	4	M 16	18	2.39
65	76.1	185	77.1	18	145	32	105	5	122	3	4	M 16	18	3.1
80	88.9	200	90.3	20	160	34	118	5	138	3	8	M 16	18	3.77
100	114.3	220	115.9	20	180	38	140	5	158	3	8	M 16	18	4.29
125	139.7	250	141.6	22	210	40	168	5	188	3	8	M 16	18	5.86
150	168.3	285	170.5	22	240	44	196	5	212	3	8	M 20	22	7.22
175	193.7	315	196.1	24	270	44	224	6	242	3	8	M 20	22	9.18

Tolerances table 2

Nominal size DN	D	d_5	b	k	h	d_4	d_2	d_3	r	f
10 to 80		+ 0,50	± 1,3		± 1,5	0/-1	+ 0,50			
100		0					0			
125 to 200	± 1				±2	0				
250		+1				- 2				
300		0		± 1,6						
350 and 400	± 3		± 1,5				+1			
450 and 500		+ 1,5			± 3	0	0			
600	± 5	0				- 3				
700 to 1000		+3 / 0		DIN 7168-g						

DIN 7168-g